California Faucets®

Rincon Bay™

STYLETHERM TRIM ONLY W/ DUAL VOLUME CONTROL

TO-THC2L-45
TO-THC2L-45X

Features

- *100˚F safety stop button with manual override*
- *7-7/8" by 5-7/8" rectangular faceplate*
- *Engraved brass temperature ring*
- *Dual integral volume controls*
- *All brass construction*
- *Over 30 finishes including 15 PVD finishes*

TO-THC2L-45 SHOWN

Codes/Standards Applicable

Product meets or exceeds the following:

- *ASME A112.18.1/CSA B125.1*
- *ASSE 1016*
- *ADA compliant (with lever handles)*

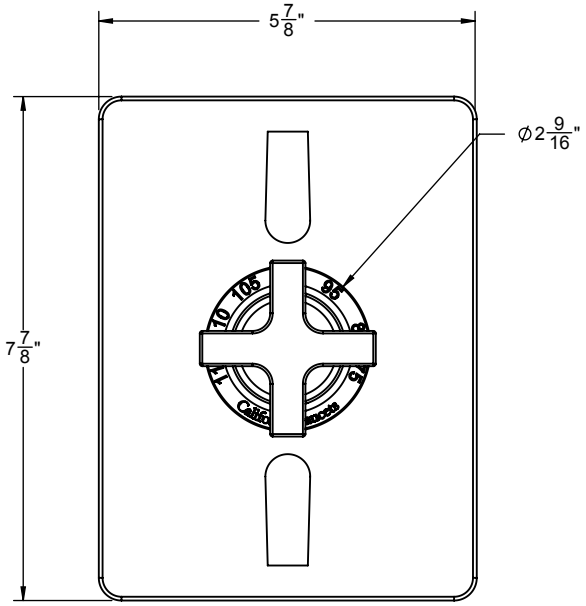

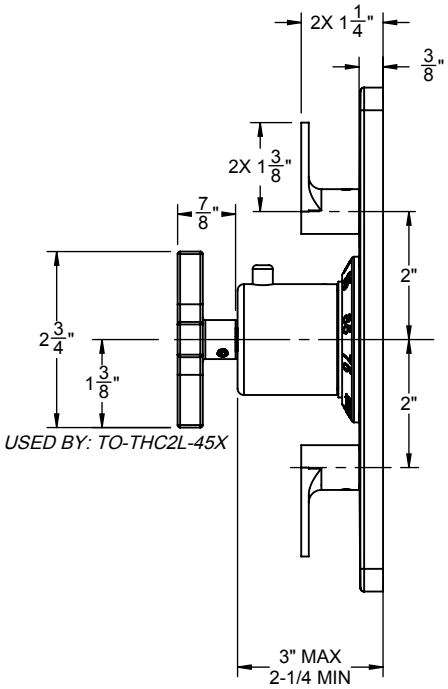

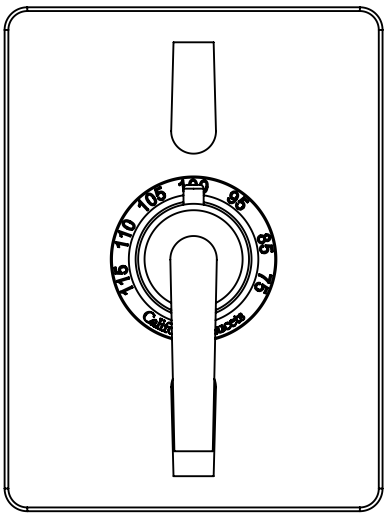

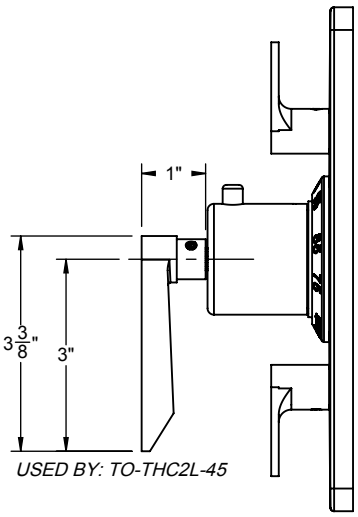

SPECIFICATIONS SUBJECT TO CHANGE WITHOUT NOTICE

ALL DIMENSIONS SHOWN TO NEAREST 1/16"