California Faucets®

Rincon Bay™

DECK TRIM DIVERTER

TO-45X.62.18
TO-45X.62.20

Features

- *Available in 28 finishes including 13 PVD finishes*
- *All brass construction*
- *Handshower: 1/2" MIP inlet with self-clean rubber jets*
- *Handshower: max flow rate:*
  2.0 gpm (7.6 L/m)
  1.8 gpm (6.8 L/m)
- *Handshower elbow: 1/2" FIP swivel nut with 1/2" MIP inlet*
- *Hose: 84" black poly braided hose. Provides durable, quiet & no damage to trim finish during operation*
- *Anti-siphon diverter valve (DDV-R) sold separately*

Codes/Standards

Product meets or exceeds the following:

- *ASME A112.18.1/CSA B125.1*
- *CEC & DOE*
- *Commmonwealth of MA*
- *EPA WaterSense handshower (2.0 gpm)*

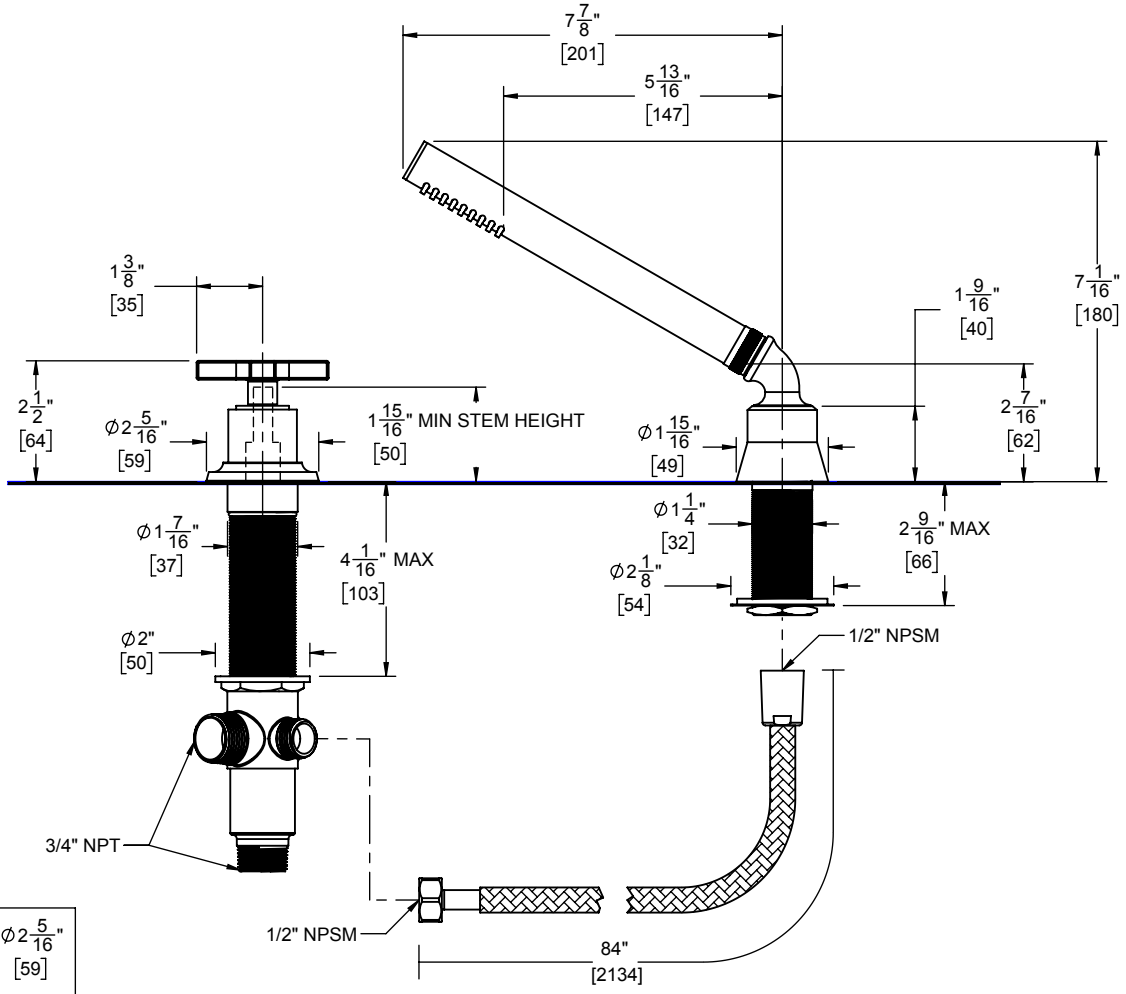

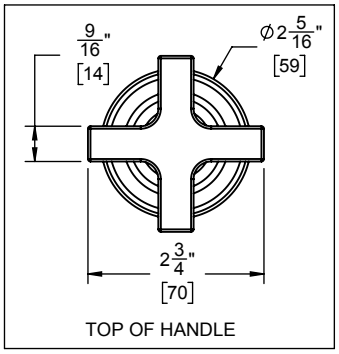

THROUGH-HOLE SPECIFICATIONS	MIN	RECOMMENDED	MAX
SHOWER:	Ø1-1/4" [32]	Ø1-1/4" [32]	Ø1-11/16" [43]
VALVE:	Ø1-7/16" [37]	Ø1-1/2" [38]	Ø1-3/4" [44]

SPECIFICATIONS SUBJECT TO CHANGE WITHOUT NOTICE

DIMENSIONS SHOWN TO NEAREST 1/16"
[DIMENSIONS SHOWN TO NEAREST 1mm]