California Faucets®

StyleFlow™ IKO

2-5/8" MULTI-FUNCTION CONTEMPORARY SHOWERHEAD

SH-303.25
SH-303.20
SH-303.18

Features

- *1/2" FIP inlet*
- *Swiss shower technology™*
- *3 functions: rain, hard rain and booster massage*
- *Self-cleaning rubber jets*
- *Solid brass pivot ball, ABS body*
- *2-5/8" diameter, gray face*
- *Replace .FR with desired max flow rate:*
  - *SH-303.25 for 2.5 gpm*
  - *SH-303.20 for 2.0 gpm*
  - *SH-303.18 for 1.8 gpm*

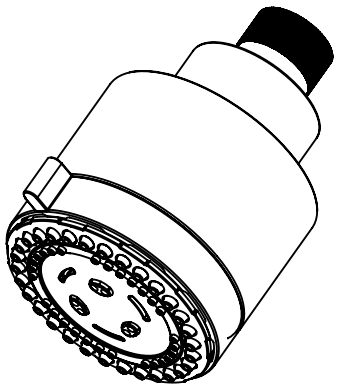

Codes/Standards

Product meets or exceeds the following:

- *ASME A112.18.1/CSA B125.1*
- *CEC (1.8 gpm)*
- *DOE (2.5, 2.0, & 1.8 gpm)*
- *Commonwealth of MA*
- *EPA WaterSense (2.0 gpm)*

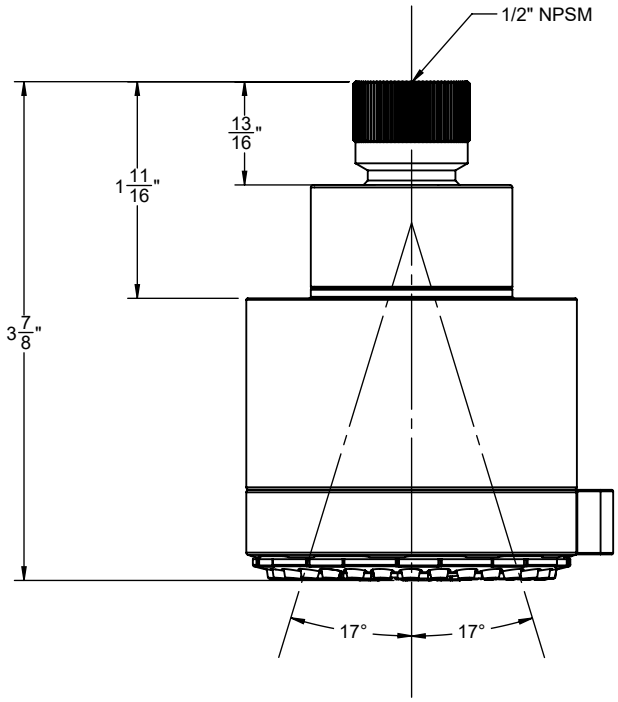

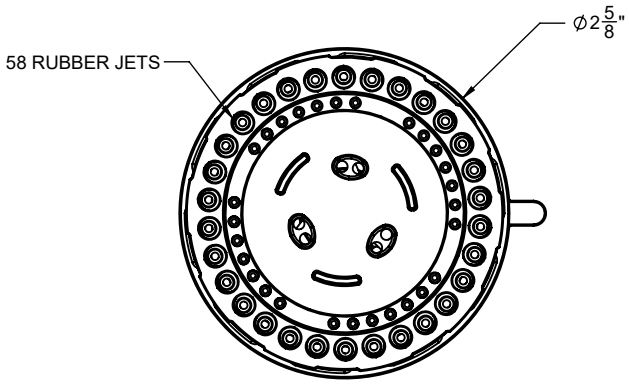

SPECIFICATIONS SUBJECT TO CHANGE WITHOUT NOTICE

DIMENSIONS SHOWN TO NEAREST 1/16"
[DIMENSIONS SHOWN TO NEAREST 1MM]