California Faucets®

Descanso®

WIDESPREAD LAVATORY FAUCET

CF-3102
CF-3102K
CF-3102F

Features

- *Over 28 finishes including 13 PVD finishes*
- *All brass construction*
- *6" spout center to center*
- *1/4" turn ceramic disc cartridge(s)*
- *Flexible braided hoses for ease of installation*
- *∅ 1-1/4" all brass touch style pop up drain assembly*
- *1.2 gpm (4.5 L /min) max flow rate*

Codes/Standards Applicable

Product meets or exceeds the following:

- *ASME A112.18.1/CSA B125.1*
- *NSF/ANSI 61 & NSF/ANSI 372*
- *CEC / DOE*
- *EPA WaterSense High Efficiency Lavatory*
- *Commonwealth of MA*
- *ADA compliant*

CF-3102 SHOWN

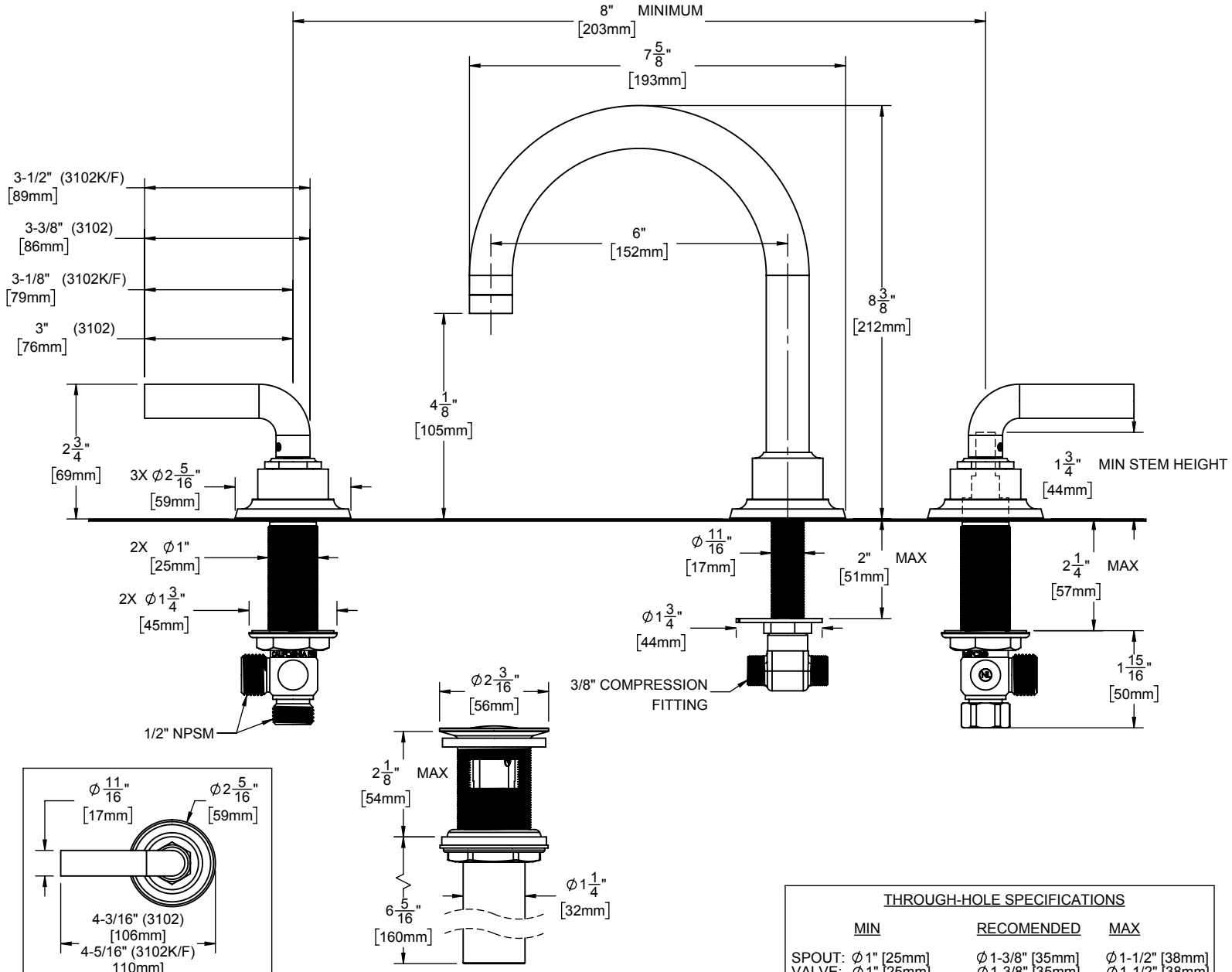

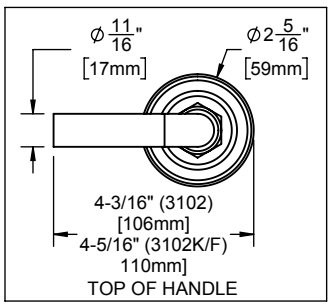

THROUGH-HOLE SPECIFICATIONS			
	MIN	RECOMENDED	MAX
SPOUT:	∅1" [25mm]	∅1-3/8" [35mm]	∅1-1/2" [38mm]
VALVE:	∅1" [25mm]	∅1-3/8" [35mm]	∅1-1/2" [38mm]

ALL DIMENSIONS SHOWN TO NEAREST 1/16"
[ALL DIMENSIONS SHOWN TO NEAREST 1MM]

SPECIFICATIONS SUBJECT TO CHANGE WITHOUT NOTICE